REV.	DESCRIPTION	DATE	APPROVED

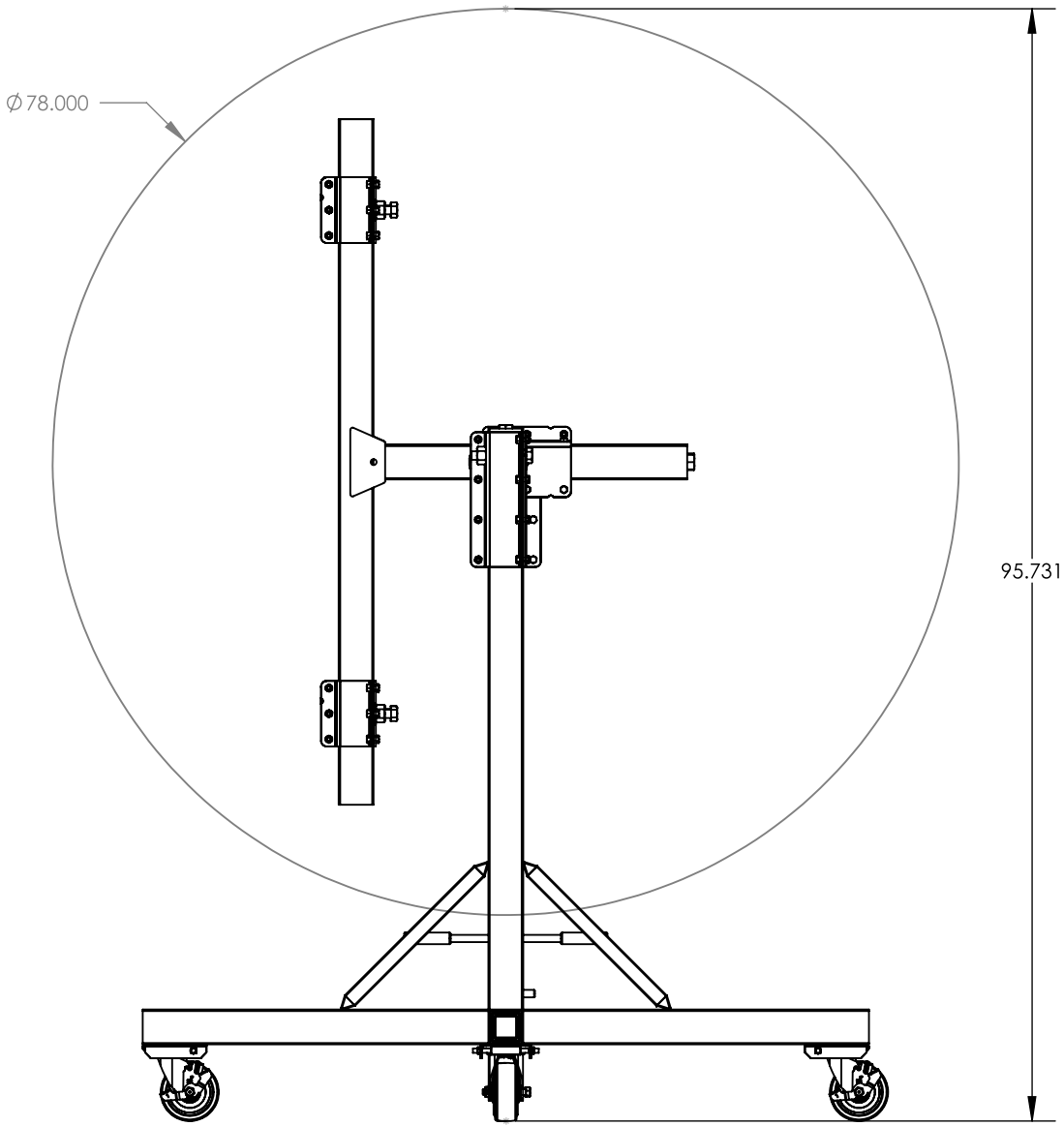

NOTE:
1. DIMENSIONS MAY VARY DEPENDING ON HEIGHT, WIDTH, & BALANCE CENTER OF VEHICLE.

PROPRIETARY AND CONFIDENTIAL

THE INFORMATION CONTAINED IN THIS DRAWING IS THE SOLE PROPERTY OF DUTRO CO. ANY REPRODUCTION IN PART OR AS A WHOLE WITHOUT THE WRITTEN PERMISSION OF DUTRO CO. IS PROHIBITED.

Dutro COMPANY
675 N 600W LOGAN, UT 84321
PHONE: 435-752-3921 FAX: 435-752-6360

UNLESS OTHERWISE SPECIFIED:

DIMENSIONS ARE IN INCHES
TOLERANCES:
FRACTIONAL: ± 1/32
ANGULAR: ± .5° BEND ± .03
ONE PLACE DECIMAL = ± .1
TWO PLACE DECIMAL = ± .03
THREE PLACE DECIMAL = ± .005

PROJECT NAME:	AUTO TWIRLER ROTISSERIE		CUSTOMER: AUTO TWIRLER
MATERIAL:	STEEL		
FINISH:	STANDARD COLOR		DESCRIPTION: PRO ROTISSERIE
MODELED BY:	BHS	DATE: 9/7/2017	
DRAWN BY:	BHS	DATE: 9/7/2017	PART#: AT-PRO-AS
CHECKED BY:		DATE:	DWG: AT-PRO-90DEGREE
DIR: C:\CAD_FILES_VAULT\CAD FILES\AUTOTWIRLER\ROTISSERIES\			

REV A

SIZE A

SHEET 1 OF 1