MODEL K15A-30
START / STOP

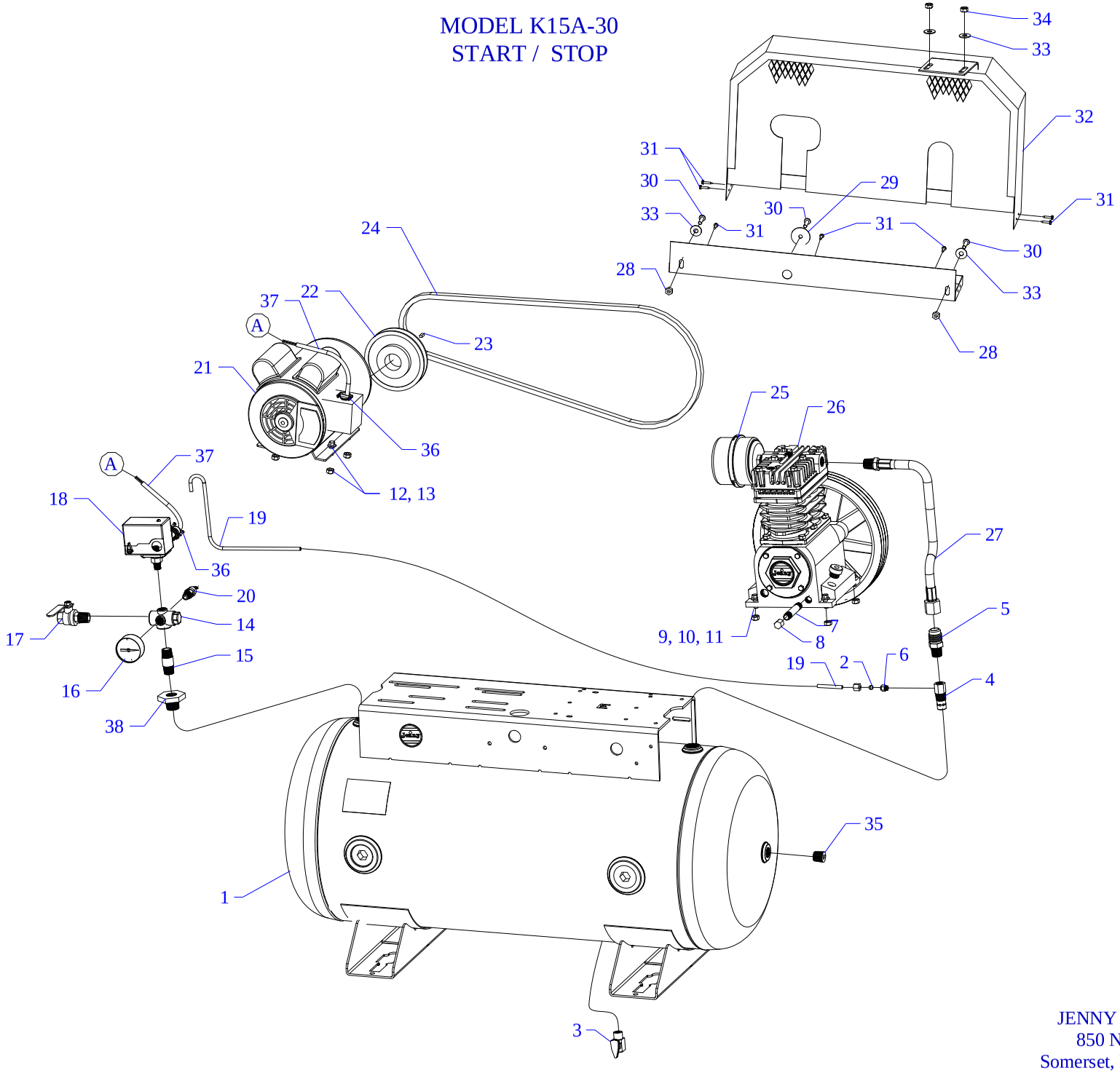

JENNY PRODUCTS, INC.
850 N. Pleasant Ave.
Somerset, Pennsylvania 15501

Copyright 2007

Jenny Products, Inc.
850 North Pleasant Avenue
Somerset, PA 15501-1069
Ph: 814-445-3400
Fx: 814-445-2280

Parts List for Model K15A-30 Single & Three Phase

NOTE: The quantity number indicates the total number of pieces required for a complete unit repair.
When ordering parts give compressor model, serial number and part number. Order assemblies when possible.

REF. NO.	PART NO.	DESCRIPTION	QTY.
1	411-1048	TANK,HRZNTL,30G,UM,F&K&GE,H30UM-1	1
2	121-1080	SLEEVE,COMPRESSION,BRASS,1/4"	1
3	141-1077	VALVE,BALL,LEVER,1/4 TURN,1/4"M X 1/4"F	1
4	141-1036	VALVE,CHECK,INSERT,3/4"M X1/2"F,W/1/8"PT	1
5	121-1008	CONNECTOR,MALE,BRASS,5/8-45SAEX1/2"NPTM	1
6	121-1025	CONNECTOR,MALE,COMPRESSION,BR,1/4TBX1/8"	1
7	122-1034	NIPPLE,STEEL,SCH 40,1/4" X 5" L	1
8	122-1126	CAP,HEX,MI,PLATED,1/4"NPT	1
9	120-1116	NUT,LOCK,FLANGE,HEX,SERR,ST,PLTD,1/4-20	4
10	120-1220	SCREW,CAP,HEXHD,GR5,ST,PLD,1/4-20X1-3/4	4
11	120-1070	WASHER,FLAT,STEEL,PLATED,SAE,1/4"	4
12	120-1018	SCREW,FLANGE,HEX,SERR,ST,PLD,5/16-18X3/4	4
13	120-1119	NUT,LOCK,FLANGE,HEX,SERR,ST,PLTD,5/16-18	4
14	220-1059	BLOCK,MANIFOLD,AL,5 PORT,SPRINKLER,MC-5S	1
15	122-1088	NIPPLE,STEEL,SCH 80,PLATED,1/2" X 2"	1
16	142-1000	GAUGE,PSI,200#,BK MT,JENNY,2",1/4NPT,PG2	1
17	141-1078	VALVE,BALL,OUTLET,1/4 TURN,1/2"M X 1/2"F	1
18	140-1074-01	SWITCH,PSI,2HP,100-125#,UNLDR&LVR,PBVL	1
19	610-1090	TUBE,CONTROL,COPPER,W/SLEEVE,1/4"X39"LG	1
20	141-1014	VALVE,SAFETY,ASME,1/4",165 PSI,SVU165	1
21	130-1014	MOTOR,1.5HP,115-230/60/1,1725RPM,ODP	1
21*	130-1016	MOTOR,1.5HP,200-208/60/3,1725RPM,ODP	1
	154-1237	PULLEY,CI,SG,5.0PDA 7/8ID,AK54X7/8 "3 Phase Only"	1
21**	130-1017	MOTOR,1.5HP,230-460/50-60/3,1725RPM,ODP	1
	154-1237	PULLEY,CI,SG,5.0PDA 7/8ID,AK54X7/8 "3 Phase Only"	1

Copyright 2006 Jenny Products, Inc.

Jenny Products, Inc.
850 North Pleasant Avenue
Somerset, PA 15501-1069
Ph: 814-445-3400
Fx: 814-445-2280

Parts List for Model K15A-30 Single & Three Phase

NOTE: The quantity number indicates the total number of pieces required for a complete unit repair.
When ordering parts give compressor model, serial number and part number. Order assemblies when possible.

REF. NO.	PART NO.	DESCRIPTION	QTY.
22	154-1204	PULLEY,CI,SG,5.0PDA,5/8ID,AK54X5/8	1
23	120-1108	KEY,STEEL,BLACK,3/16X3/16X 1-1/2" LENGTH	1
24	154-4L470	BELT,VEE,A43,4L-470	1
25	320-1121	FILTER,W/DECALS,ASSY,G154S	1
26	421-1101	PUMP,CMPRSR,PISTON,REPLCMT,BLUE,K	1
27	360-1390	AFTERCOOLER,HOSE,SS,TEFLON,5/8"ODX16-1/2	1
28	120-1116	NUT,LOCK,FLANGE,HEX,SERR,ST,PLTD,1/4-20	2
29	120-1072	WASHER,FENDER,ST,PLATED,1/4"X1-1/2"OD	1
30	120-1267	SCREW,PAN HD,PHIL,STEEL,PLTD,1/4-20 X 1"	3
31	120-1177	SCREW,SELF DRILL,HEX,ST,PL,12 X 3/4	7
32	320-1177	BELTGUARD,F&K,W/PAN,3.4WX13.0HX23LG	1
33	120-1075	WASHER,FLAT,STEEL,PLATED,5/16"	4
34	120-1119	NUT,LOCK,FLANGE,HEX,SERR,ST,PLTD,5/16-18	2
35	122-1047	PLUG,SOCKET,HEX,ST,PLTD,1/2" NPT	1
36	123-1029	CONNECTOR,ROMEX,CLAMP,STRAIGHT,3/8"	2
37	123-1003	WIRE,ASSY,BX,14/2,WITH GROUND	2FT
38	122-1071	BUSHING,REDUCER,HEX,ST,PLTD,3/4" X 1/2"N	1
NOT SHOWN	610-1225	KIT,ELEMENT,FILTER,G54E,PKG OF 4,G54EP	1
NOT SHOWN	105-1209	OIL,PUMP,SYNTHETIC,BLUE,1 QUART,ESQ	1
NOT SHOWN	330-1023	MAG STRT,25A 3P 460V,SVC RPLM,MGSA-3-460	1
	140-1028-E34	OVERLOAD,HEATER,STARTER,MAGNETIC,E34	3
NOT SHOWN	330-1022	MAG STR,25A,3P,200/208/230V,MGSA-3-230	1
	140-1028-E47	OVERLOAD,HEATER,STARTER,MAGNETIC,E47	3
NOT SHOWN	330-1021-01	MAG STR 25A 1P115/208/230 REP MGSA-1-230	1
OPTIONAL	140-1028-E56	OVERLOAD,HEATER,STARTER,MAGNETIC,E56 120V	1
	140-1028-E47	OVERLOAD,HEATER,STARTER,MAGNETIC,E47 230V	1

Copyright 2006 Jenny Products, Inc.

MAGNETIC STARTER WIRING DIAGRAM
1 Phase; 208 & 230 Volt

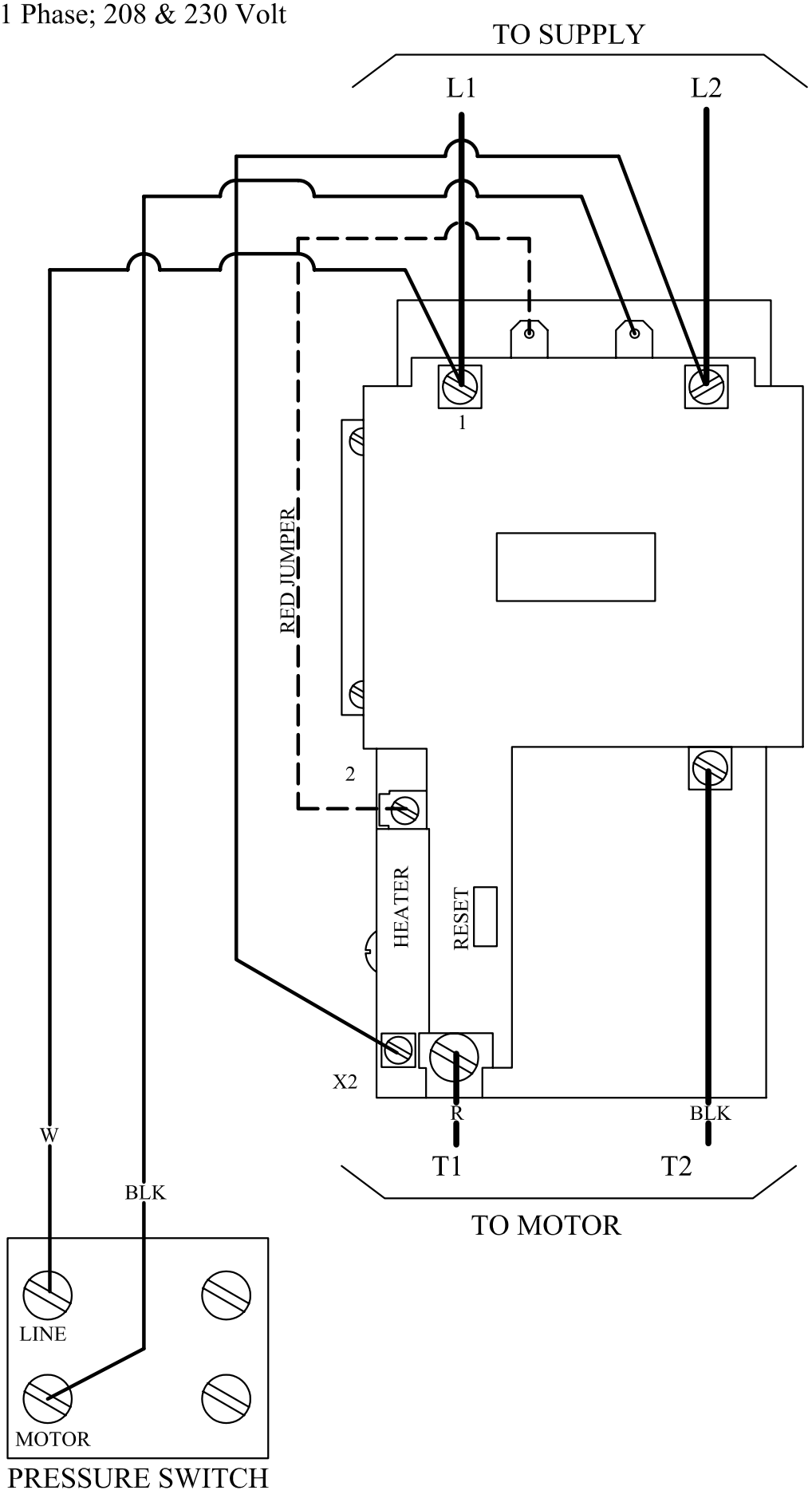

JENNY PRODUCTS INC.
850 N. Pleasant Ave.
Somerset, Pennsylvania 15501

Copyright 2007

MAGNETIC STARTER WIRING DIAGRAM
3 Phase; 208, 230, & 460 VOLT

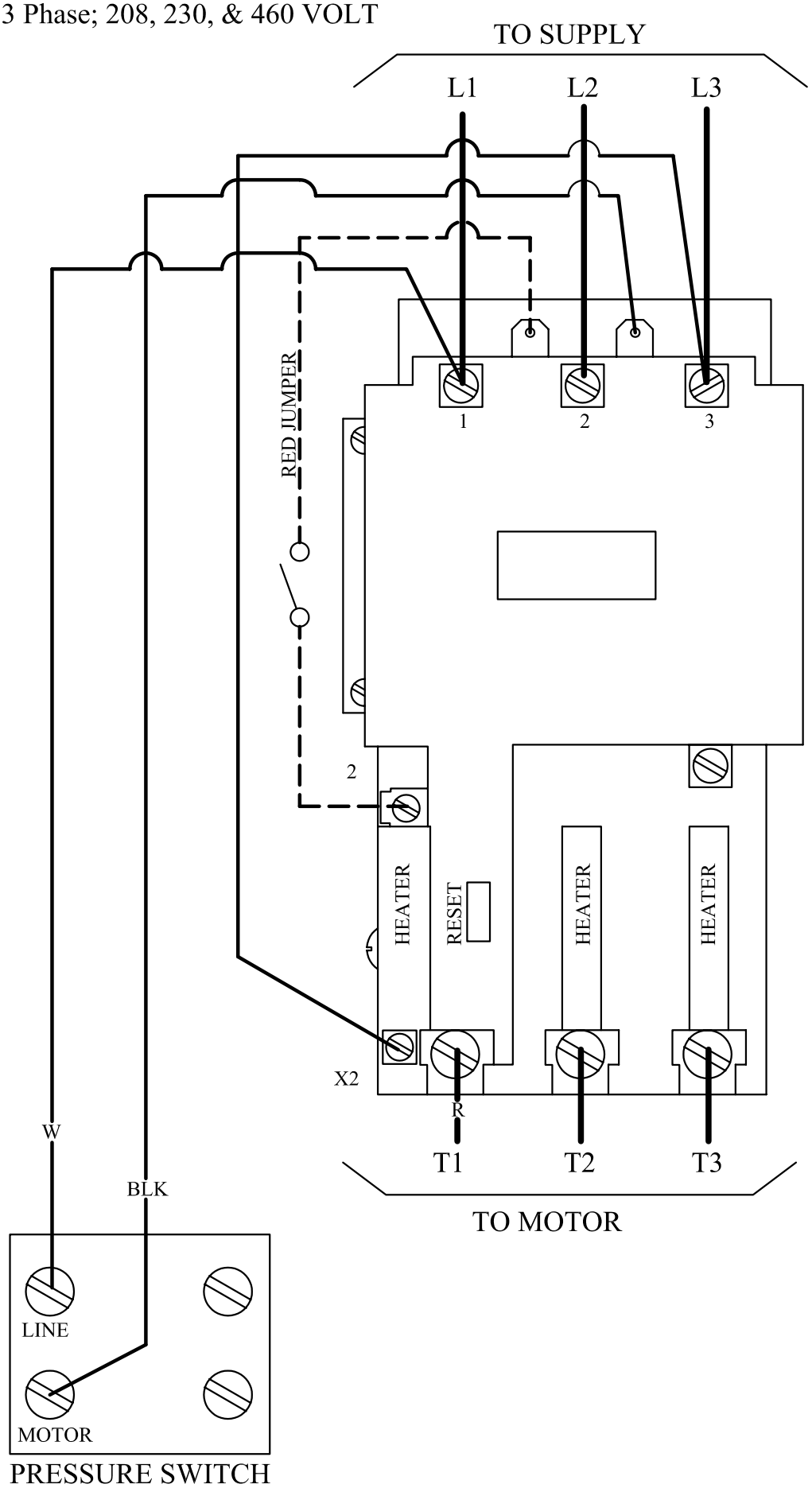

JENNY PRODUCTS INC.
850 N. Pleasant Ave.
Somerset, Pennsylvania 15501

Copyright 2007

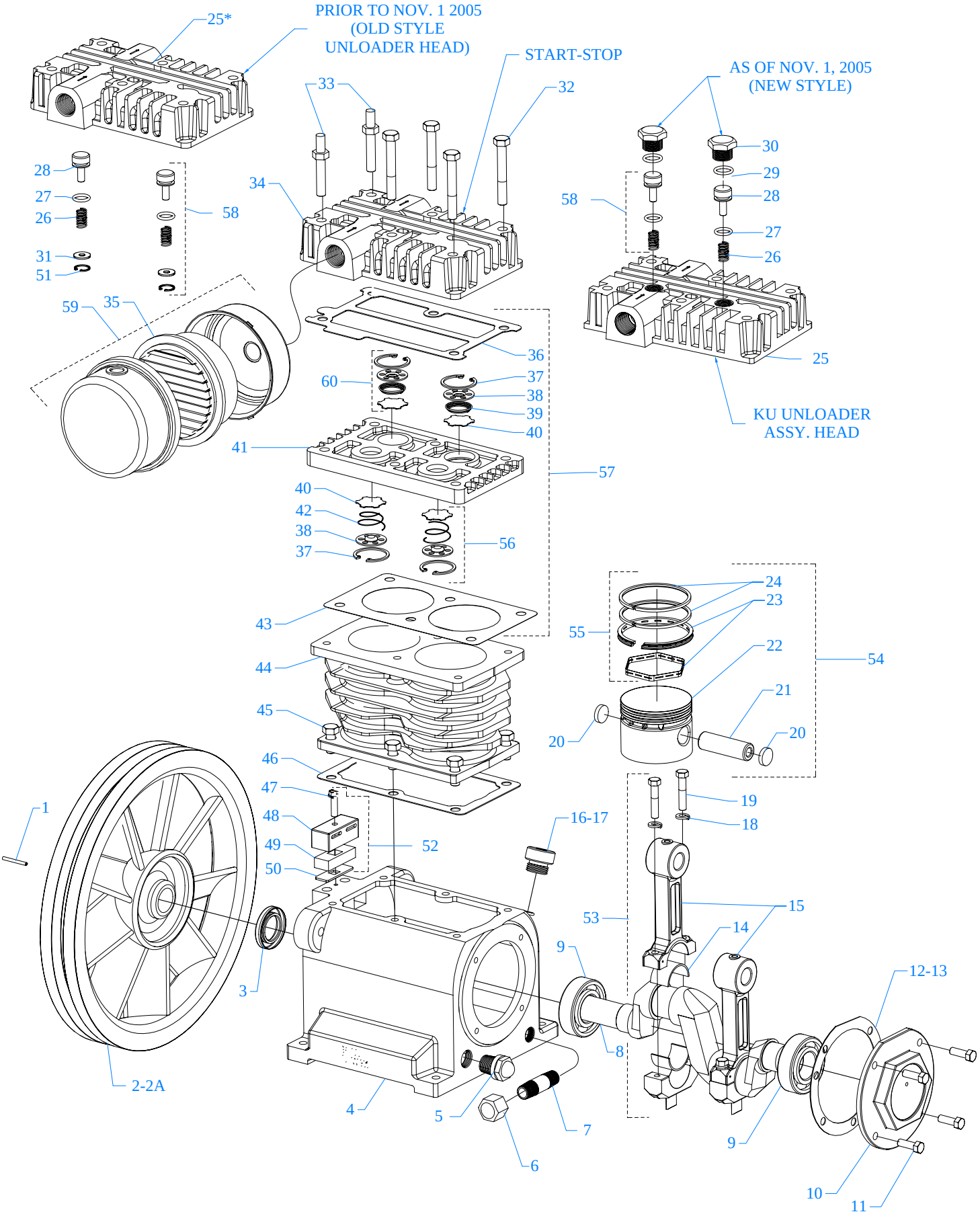

MODEL K & KU
Two Cylinder Single Stage
2-1/2" Bore X 2" Stroke

JENNY PRODUCTS, INC.
850 N. Pleasant Ave.
Somerset, Pennsylvania 15501

Copyright 2007

Jenny Products, Inc.
850 North Pleasant Avenue
Somerset, PA 15501-1069
Ph: 814-445-3400
Fx: 814-445-2280

Parts List for Model K & KU Pump Assembly

NOTE: The quantity number indicates the total number of pieces required for a complete unit repair.
When ordering parts give compressor model, serial number and part number. Order assemblies when possible.

REF. NO.	PART NO.	DESCRIPTION	QTY.
1	120-1163	PIN,ROLLED,COILED,STL,BLK,1/4ODX1L,K25	1
2	220-1093	FLYWHEEL,K PUMP,CI,10-3/8,1 GROOVE,K23A	1
2A	220-1090	FLYWHEEL,GT PUMP,CI,13-1/4,2 GROOVE,G23 (KC Pump)	1
3	150-1036	SEAL,OIL,LIP,SINGLE,0.875 DIA,K11E	1
4	220-1009	CRANKCASE,K PUMP,CI,W/SIGHT GLASS,K1	1
5	160-1076	GAUGE,SIGHT,LEVEL,OIL,3/8"NPT,LO-M49	1
6	122-1083	CAP,HEX,MI,1/4"NPT	1
7	122-1032	NIPPLE,STEEL,SCH 40,1/4" X 3" L	1
8	220-1010	CRANKSHAFT,K PUMP,CI,MACHINED,K20A	1
9	150-1000	BEARING,BALL,K9	2
10	220-1001	CAP,BEARING,K PUMP,CI,MACHINED,K2	1
11	120-1004	SCREW,CAP,HEXHD,GR5,ST,BLK,1/4-20X3/4 (10FT-LB)	4
12	104-1000-01	GASKET,CAP,BEARING,F&K&G PUMP,1/32THK,L3	1
13	104-1000-02	GASKET,CAP,BEARING,F&K&G PUMP,1/64THK,L4	1
14	150-1011	BEARING,ROD,CONNECTING,PUMP,F,K,G	4
15	310-1001-02	ROD,CONNECTING,WO/BRNG INSERT,L21L&L21K	2
16	610-1029	PLUG,CRANKCASE,FILL,OIL,W/O-RING,K14	1
17	104-1016	RING,O,BUNA-N,5/8"IDX13/16"ODX3/32"THK	1
18	120-1068	WASHER,LOCK,SPLIT,ST,BLK,HIGH CLLR,1/4"	4
19	120-1010	SCREW,CAP,HEXHD,GR5,ST,BLK,1/4-20X1-1/4 10 FT-LB	4
20	104-1103	BUMPER,WRIST PIN,PLASTIC,K36A	4
21	150-1005	PIN,PISTON,STEEL,HARDENED,K35	2
22	220-1005	PISTON,PUMP,ALUMINUM,MACHINED,K32	2

Copyright 2007 Jenny Products, Inc.

Jenny Products, Inc.
850 North Pleasant Avenue
Somerset, PA 15501-1069
Ph: 814-445-3400
Fx: 814-445-2280

Parts List for Model K & KU Pump Assembly

NOTE: The quantity number indicates the total number of pieces required for a complete unit repair.
When ordering parts give compressor model, serial number and part number. Order assemblies when possible.

REF. NO.	PART NO.	DESCRIPTION	QTY.
23	610-1065	KIT,RING,OIL,W/EXPANDER,ASSY,K34	2
24	150-1003	RING,COMPRESSION,PISTON,STEEL,EBA 22,K33	4
25	220-1016	HEAD,UNLOADING,G PUMP,CI,6HOLES,LU80	1
26	150-1020	SPRING,VALVE,UNLOADER,INTAKE, KU83	2
27	104-1020	RING,O,SILICON,7/16"IDX5/8"ODX3/32"THK	2
28	150-1028	PISTON,UNLOADER,VALVE,BRASS,KU81	2
29	104-1015	RING,O,BUNA-N,1/2"IDX11/16"ODX3/32"THK	2
30	122-1051	PLUG,HEX ,BRASS,11/16-16 UN-2B X .550	2
31	150-1042	WASHER,BRASS,1/32X 0.605ODX1/4 ID,KU84	2
32	120-1028	SCREW,CAP,HEXHD,GR5,ST,BLK,5/16-18X2-1/4 (22 FT-LB)	4
33	120-1252	BOLT,STUD,HEX,ST,5/16-18X2-1/4X5/8,K52-1 (22 FT-LB)	2
34	310-1004	HEAD,START/STOP,G PUMP,REPLACEMNT,L50	1
35	150-1104	ELEMENT,FILTER,AIR,COMPRESSOR,JENNY,G54E	1
36	104-1008	GASKET,HEAD,K&G&W PUMP,1/32THK,L51	1
37	150-1041	RETAINER,VALVE,STEEL,PAS,0.062"THK,K43	4
38	109-1010	VALVE,BUMPER,STEEL,K44	4
39	150-1018	SPRING,CONE,SS,VALVE,DISCHARGE,K46	2
40	109-1011	VALVE,DISC,STAINLESS STEEL,K47	4
41	220-1013	PLATE,VALVE,L PUMP,CI,MACHINED,L40	1
42	150-1017	SPRING,CONE,SS,VALVE,INTAKE,K45	2
43	104-1007	GASKET,PLATE,VALVE,K&G&W PUMP,1/32TK,L41	1
44	360-1150	CYLINDER,K PUMP,CI,PAINTED,BLUE,K30	1
45	120-1017	SCREW,CAP,HEXHD,GR5,ST,BLK,5/16-18X3/4 (15FT-LB)	6

Copyright 2007 Jenny Products, Inc.

Jenny Products, Inc.
850 North Pleasant Avenue
Somerset, PA 15501-1069
Ph: 814-445-3400
Fx: 814-445-2280

Parts List for Model K & KU Pump Assembly

NOTE: The quantity number indicates the total number of pieces required for a complete unit repair.
When ordering parts give compressor model, serial number and part number. Order assemblies when possible.

REF. NO.	PART NO.	DESCRIPTION	QTY.
46	104-1006	GASKET,CYLINDER,K&G&W PUMP,1/32THK,K31	1
47	132776	SCREW,MACH,RND HD,SLTD,ST,PL,#8-32X1"	1
48	104-1264	RETAINER,BREATHER,CRANKCASE,PLASTIC,BLUE	1
49	104-1265	FILTER,AIR,BREATHER,CRANKCASE,INSERT	1
50	104-1266	SEAL,BREATHER,CRANKCASE,FILTERED,RUBBER	1
51	120-1167	RETAINER,INTERNAL,ST,0.035X 0.665,KU85	2
		Assemblies	
52	610-1410	BREATHER,CRANKCASE,W/HOUSING&FILTER&SEAL Includes 47, 48, 49, 50	1
53	610-1411	ROD,CONNECTING,W/BEARNG INSERT,L21L&L21K INCLUDES 14(2), 15, 18(2), 19(2)	2
54	610-1028	PISTON,W/RINGS&PIN,ASSY,K132 INCLUDES 20 (2), 21, 22, 23, 24 (2)	2
55	610-1020	KIT,PUMP,RING,PISTON,F&K&G&W PUMP,K133 INCLUDES 23 (2), 24 (4)	1
56	610-1031	VALVE,SUCTION,ASSY,K145 INCLUDES 37, 38, 40, 42	2
57	610-1045	PLATE,VALVE,W/VALVES,ASSY,L140 INCLUDES 36, 41, 43, 56(2), 60(2)	1
58	610-1042	VALVE,UNLOADER,HEAD,PUMP,ASSY,KU181 INCLUDES 26, 27, 28, 31, 51	2
59	320-1121	FILTER,W/DECALS,ASSY,G154S	1
60	610-1032	VALVE,DISCHARGE,ASSY,K146 INCLUDES 37, 38, 39, 40	2
61	610-1026	KIT,GASKET,K PUMP,ASSY,K100A INCLUDES 12,13,36,43,46	1
NOT SHOWN	610-1123	KIT,BASIC,REPAIR,KU PUMP,K101 W/G54E INCLUDES 35, 52, 55, 56(2), 60(2), 61	1
NOT SHOWN	610-1304	KIT,BASIC,REPAIR,KU PUMP,W/G54E,KU101G	1

Copyright 2007 Jenny Products, Inc.

Jenny Products, Inc.
850 North Pleasant Avenue
Somerset, PA 15501-1069
Ph: 814-445-3400
Fx: 814-445-2280

Parts List for Model K & KU Pump Assembly

NOTE: The quantity number indicates the total number of pieces required for a complete unit repair.
When ordering parts give compressor model, serial number and part number. Order assemblies when possible.

REF. NO.	PART NO.	DESCRIPTION	QTY.
		INCLUDES 35, 52, 55(2), 56(2), 58(2), 60(2), 61 W/G54E	
NOT SHOWN	105-1209	OIL,PUMP,SYNTHETIC,BLUE,1 QUART,ESQ	1
NOT SHOWN	610-1226	KIT,FILTER,ASSY,G154,PKG OF 4,G154P	1
NOT SHOWN	610-1186	KIT,ELEMENT,FILTER,L54E,PKG OF 4,L54EP	1
NOT SHOWN	150-1010	ELEMENT,FILTER,AIR,COMPRESSOR,JENNY,L54E	1

Copyright 2007 Jenny Products, Inc.